ZR61

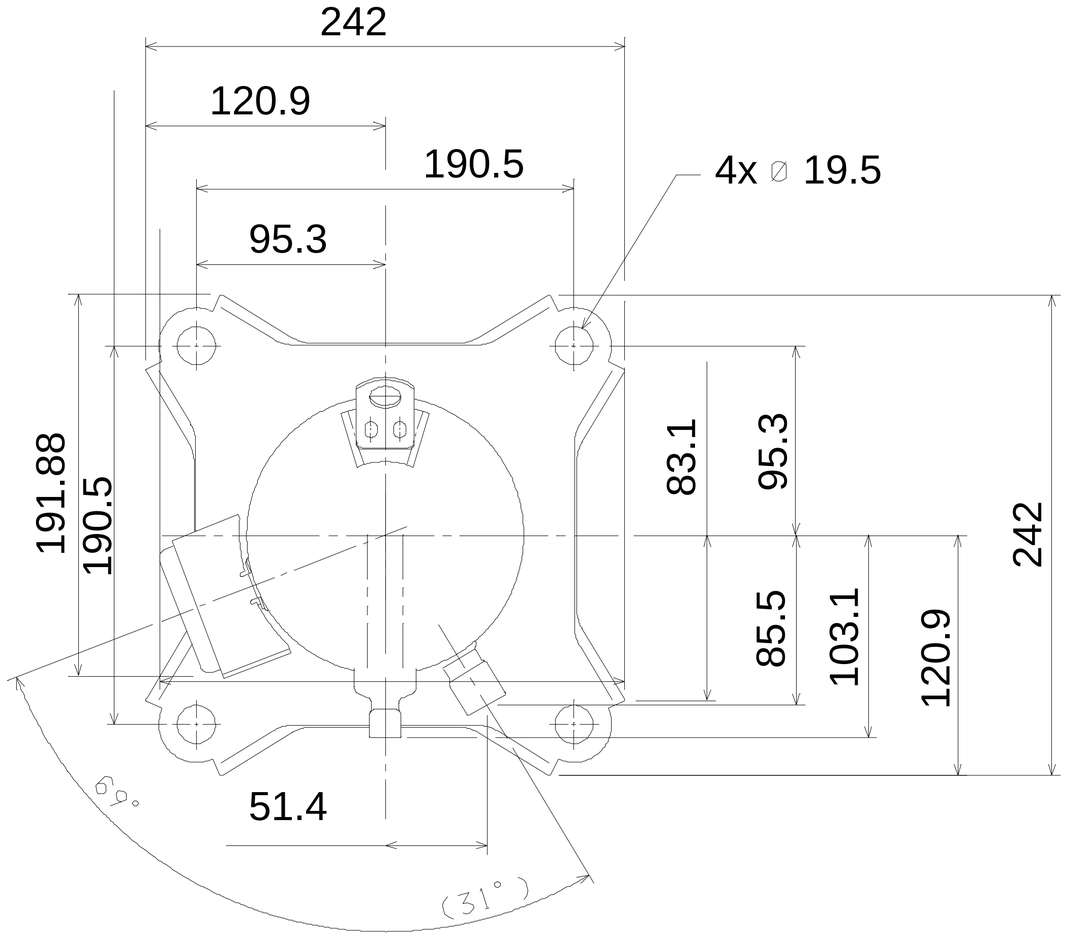
242
120.9
190.5
95.3
4x ∅ 19.5
191.88
190.5
83.1
95.3
85.5
103.1
120.9
242
51.4
69°
(31°)

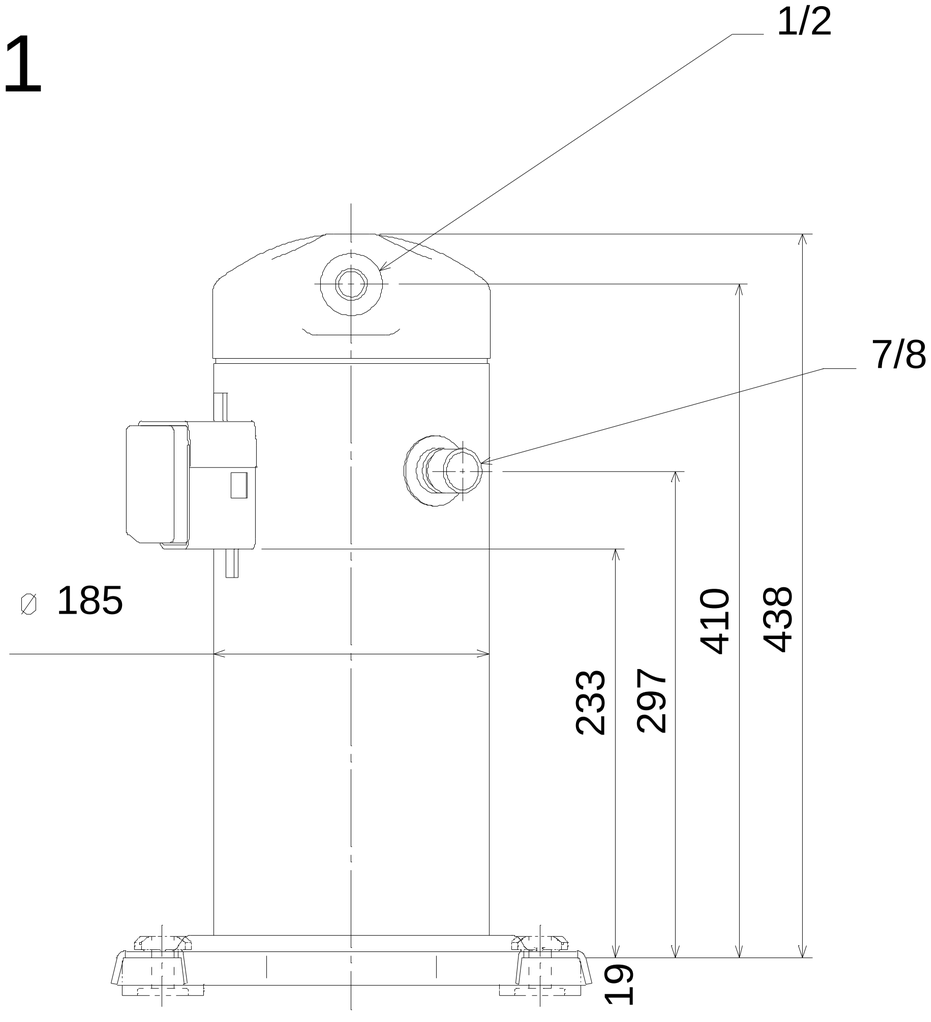
1/2
7/8
∅ 185
233
297
410
438
19